HOSHIZAKI
Advance MD

Parts list for
ADVANCE MD K 120 BG N E

HOSHIZAKI Advance MD	

Description :

Parts list for ADVANCE MD K 120 BG N E

Compiled.		Latest revision.			Deleted.	
Date	Name	Date	Name	Rev.no	Date	Name
25/03/2026	DF	06/03/2026	AK			

Exploded view

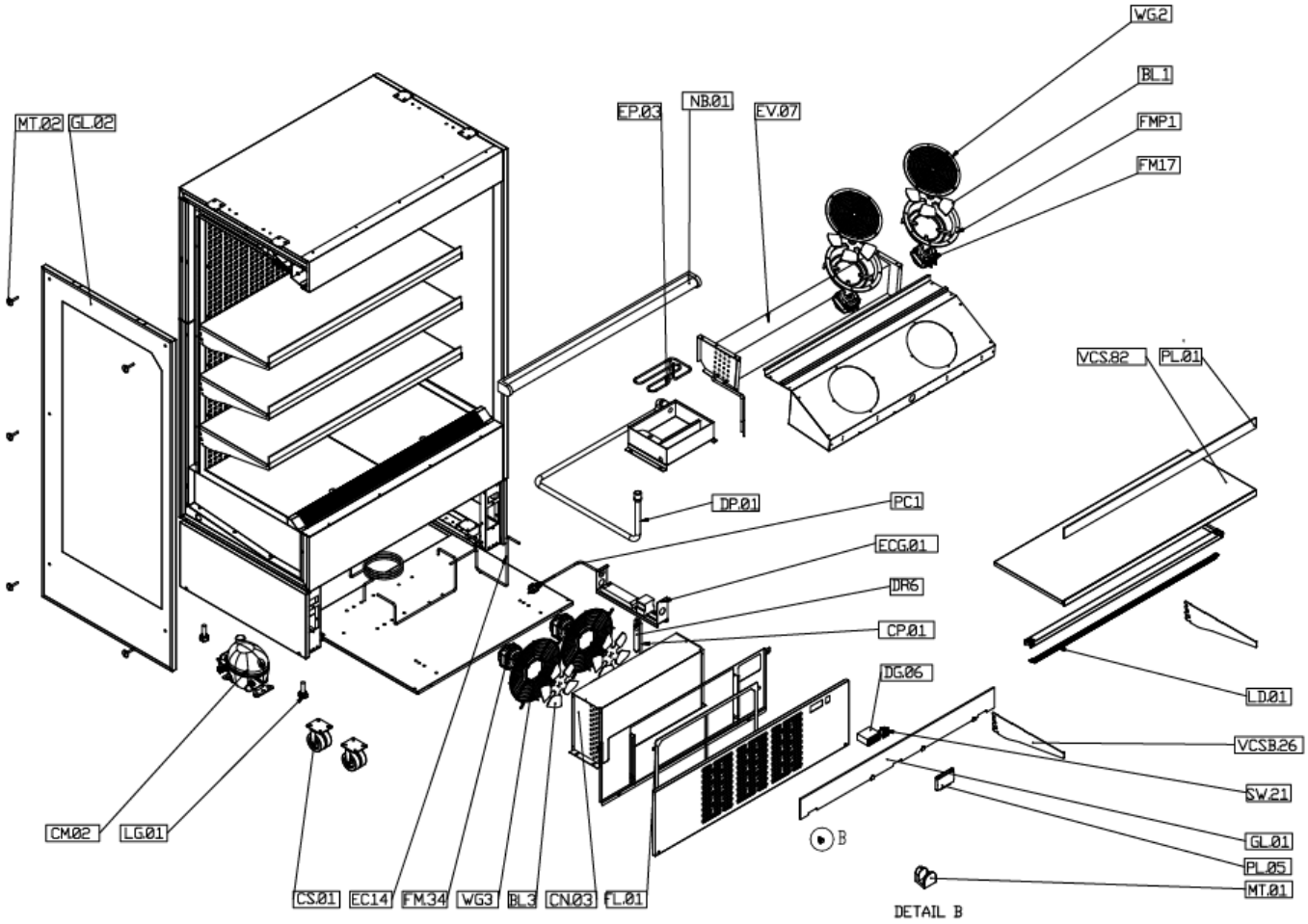

HOSHIZAKI Advance MD	

Description :

Parts list for ADVANCE MD K 120 BG N E

Compiled.		Latest revision.			Deleted.	
Date	Name	Date	Name	Rev.no	Date	Name
25/03/2026	DF	06/03/2026	AK			

PICTURE ID	DESCRIPTION	HEBV ITEM CODE
BL2	CONDENSER FAN BLADE IMPELLER ALU. Q20 CM - 34°	760660981
BL3	CONDENSER FAN BLADE IMPELLER ALU. Q25 CM - 28°	760660217
CAP31	Q 1,20 MM CAPILLARY TUBE	760660982
CM.02	COMPRESSOR EMBRACO NT6230U (843DA08)	760661016
CN.04	CONDENSER Ø250x2-9R-10T-640-1,6 CF (MA 91 943)	760661017
DR5	DRYER 20 GR DOUBLE INPUT 6-6,35 * 2,5	760660988
EP.02	RE-EVAPORATION PIPE 6MM MULTIDECK-1	760661018
DG.06	DIGITAL CONTROLLER EVCO (EV3B23N7VXWX04) NTC 230 V AC VIT WHITE LED	760660986
WG3	FAN GUARD WIRE Q25 CM (METAL BODY MOTOR)	760660235
WG2	FAN GUARD PLASTIC Q20 (I-181-01)	760660068
FMP1	FAN SUPPORT PLASTIC Q20	760660077
VCSB.26	SHELF HOLDER	760661012
VCSB.82	SHELF SHEET 1200	760661013
GL.01	FRONT AIR PROTECT GLASS 1200	760661022
EV.06	EVAPORATOR 6x6 (25x25_3/8") 910L 8h 1NC	760661019
PL.01	SHELF STOPER PLEXIGLAS 1200	760661026
FM34	FAN MOTOR ELCO ECM 20-25 EDA20250VC0533	760660896
FM17	FAN ENGINE ELCO ECM 12-10 -100CM -ATEXLİ-HBR12N0AC3013	760660275
GL.02	MULTIDEK SIDE GLASS BLACK	760660998
LD.01	LED LIGHT 1200	760661024
PC1	POWER CORD 3 x 1,5 - 3 MT HO5VV-F	760660236
NB.01	NIGHT BLIND 1200	760661028
LG.01	ROUTIL LEG	760661003
DP.01	DRAİN PIPE-1000	760660987
EC14	DIJITAL SENSOR EVCO PROP (EVTPN630F200 NTC 2)	760661034
SW21	ANEL ON - OFF POWER SWITCH	760660637
FL.02	CONDENSER AIR FILTER MULTIDECK 2	760660996
ECG.01	ELECTRICAL BOX 1200	760660990
CS.01	CASTOR 2707	760660985
MT.02	SIDE GLASS SCREW	760661005
PL.05	DIGITAL CONTROLLER PROTECT COVER	760661010
MT.01	FRONT GLASS HOLDER	760661004