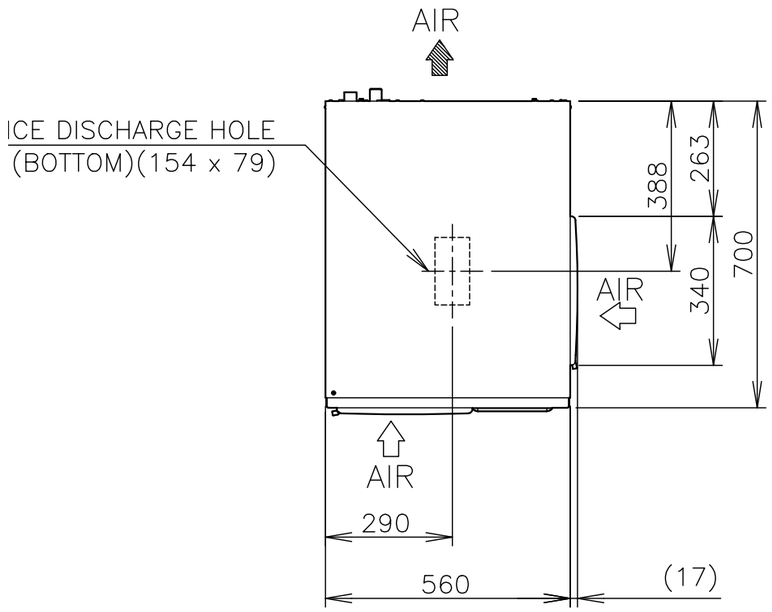
AIR
ICE DISCHARGE HOLE
(BOTTOM)(154 x 79)
388
263
700
340
AIR
AIR
290
560
(17)

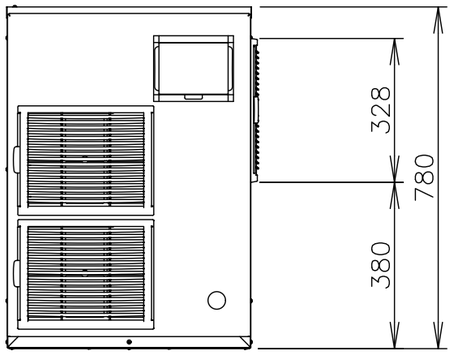
328
780
380

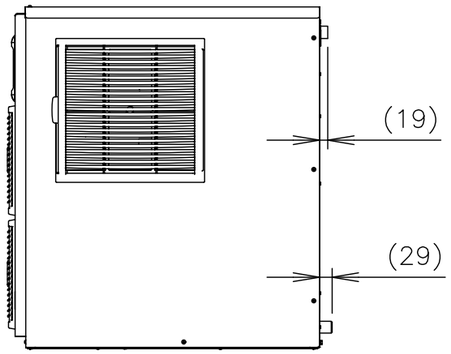
(19)
(29)

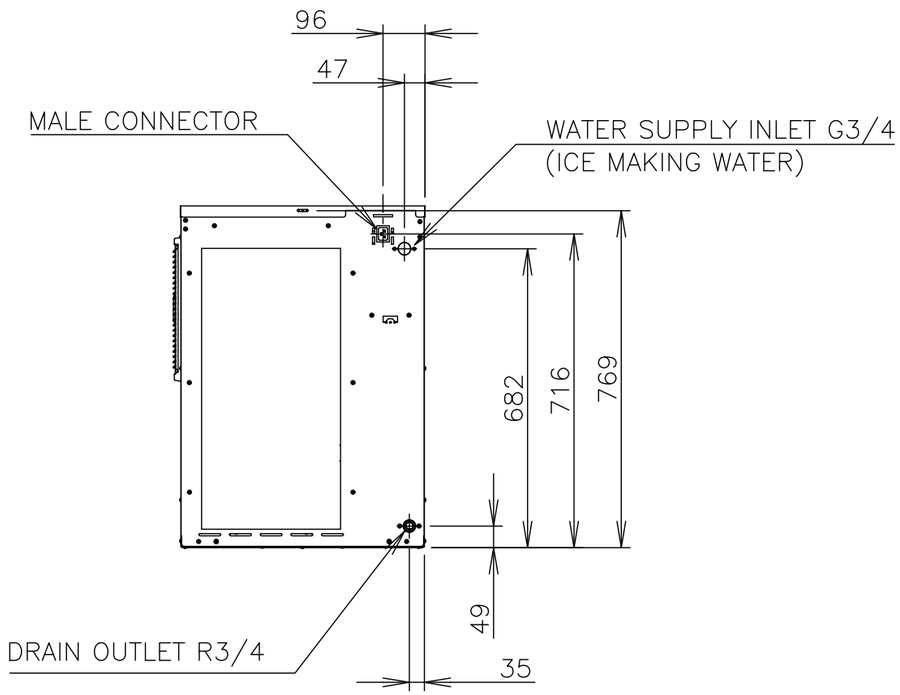
96
47
MALE CONNECTOR
WATER SUPPLY INLET G3/4
(ICE MAKING WATER)
682
716
769
49
DRAIN OUTLET R3/4
35