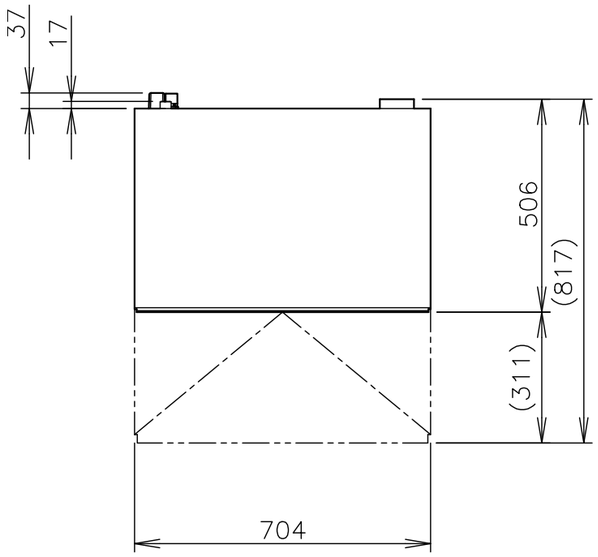
37
17
506
(817)
(311)
704

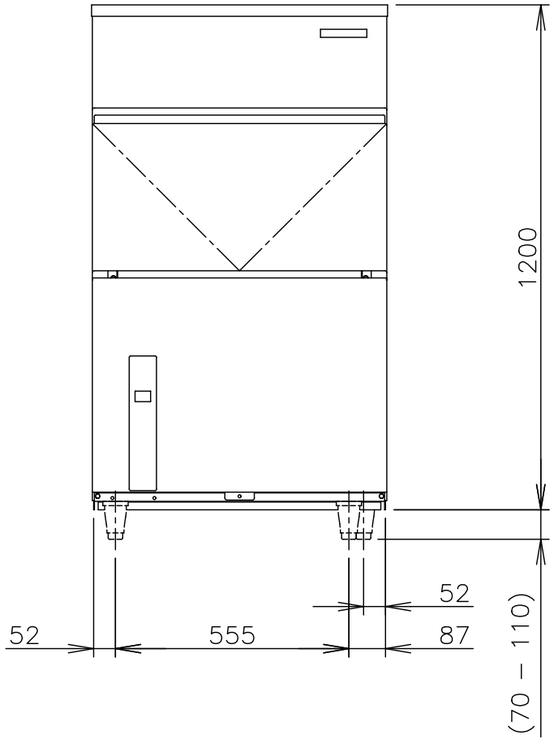
1200
52
52
555
87
(70 – 110)

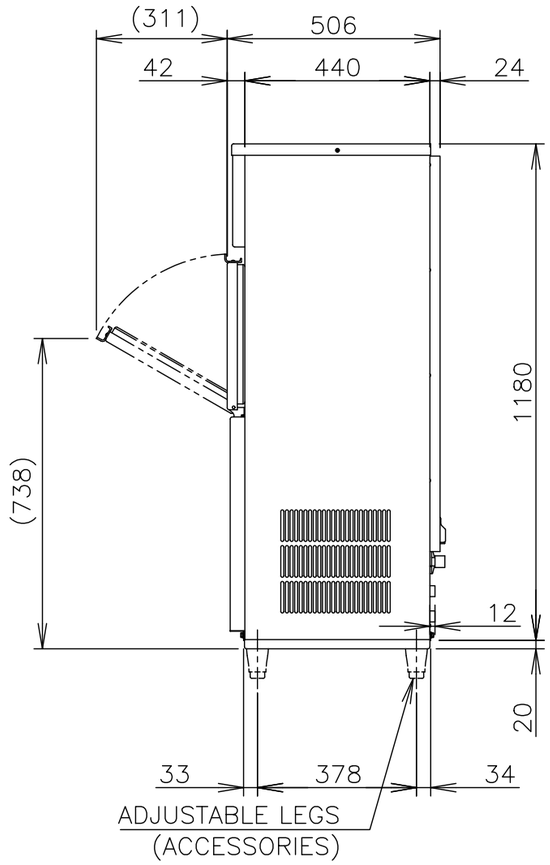
(311)
506
42
440
24
1180
(738)
12
20
33
378
34
ADJUSTABLE LEGS
(ACCESSORIES)

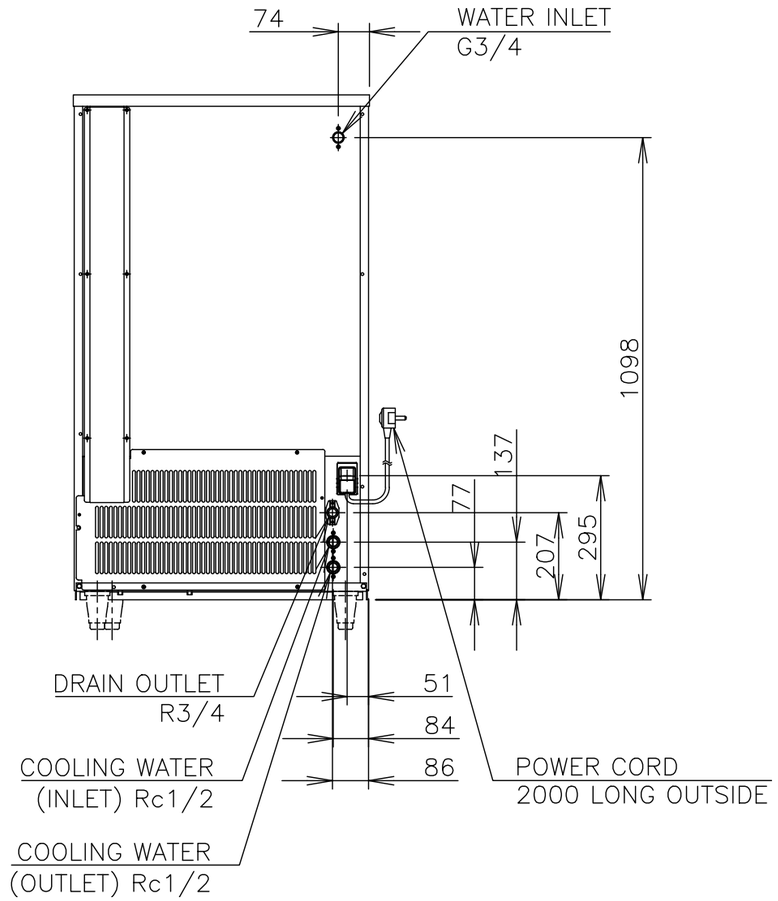
74
WATER INLET
G3/4
1098
137
77
207
295
DRAIN OUTLET
R3/4
51
84
86
COOLING WATER
(INLET) Rc1/2
COOLING WATER
(OUTLET) Rc1/2
POWER CORD
2000 LONG OUTSIDE