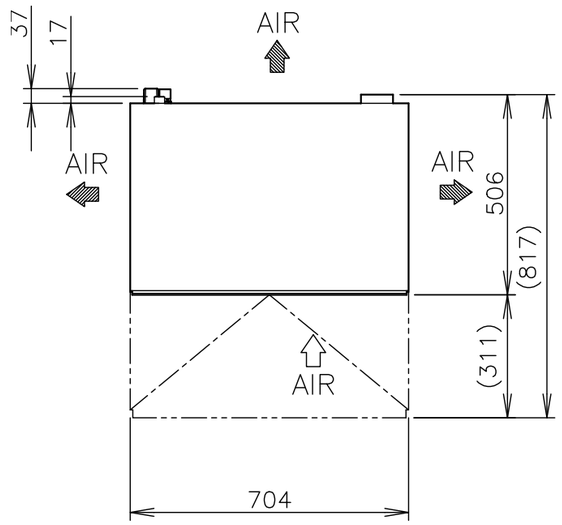
37
17
AIR
AIR
AIR
AIR
506
(817)
(311)
704

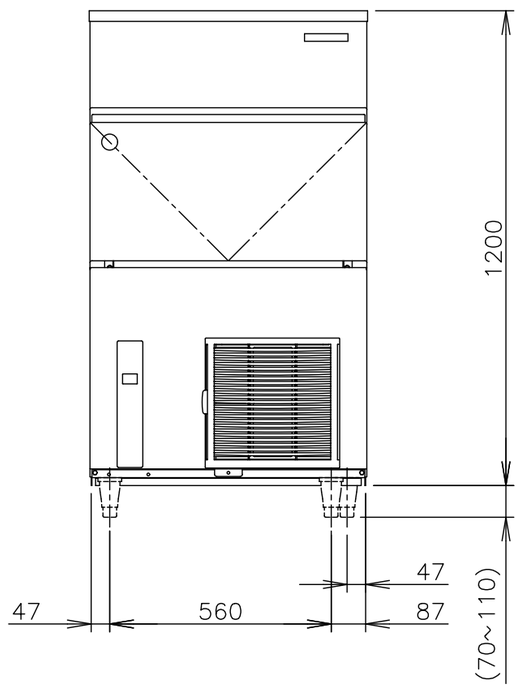
1200
47
47
560
87
(70~110)

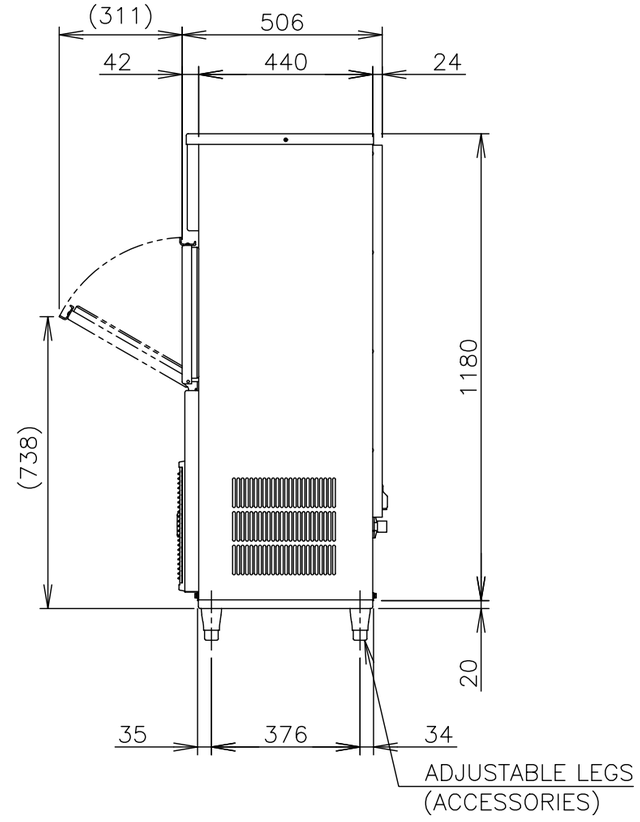
(311)
506
42
440
24
1180
(738)
20
35
376
34
ADJUSTABLE LEGS
(ACCESSORIES)

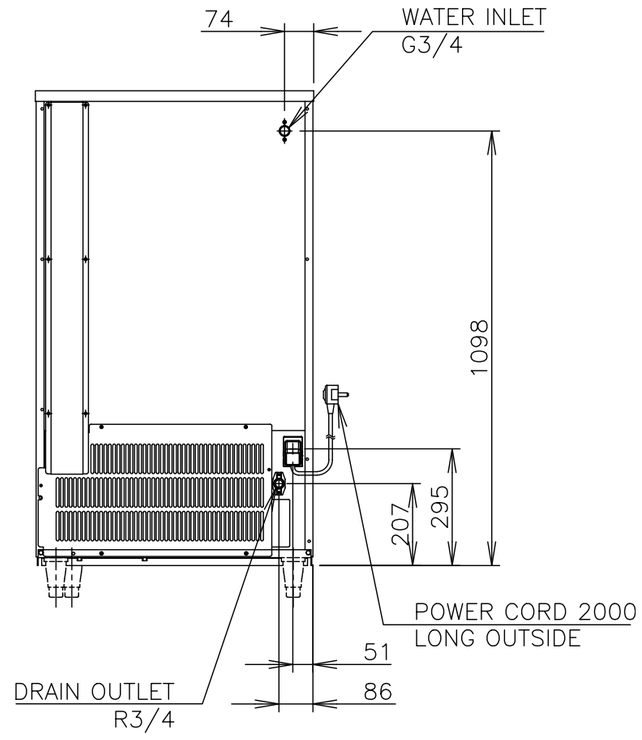
74
WATER INLET
G3/4
1098
207
295
POWER CORD 2000
LONG OUTSIDE
51
86
DRAIN OUTLET
R3/4